— PROPRIETARY —
THIS DOCUMENT CONTAINS CONFIDENTIAL, PROPRIETARY INFORMATION THAT IS FOX PROPERTY. DO NOT DISCLOSE TO OR DUPLICATE FOR OTHERS EXCEPT AS AUTHORIZED BY FOX.

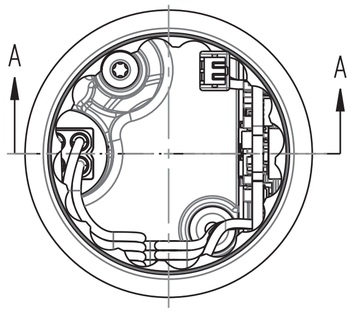

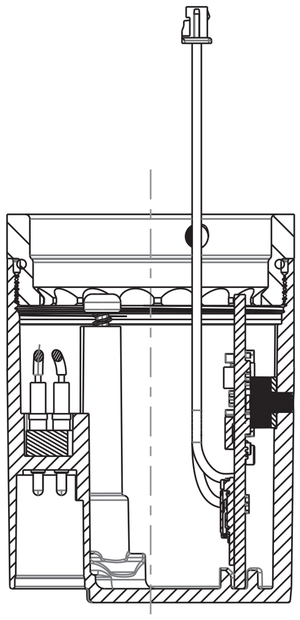

SECTION A-A

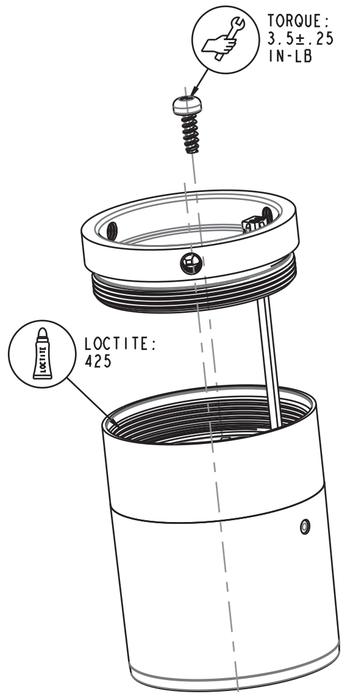

SCALE 1.5:1

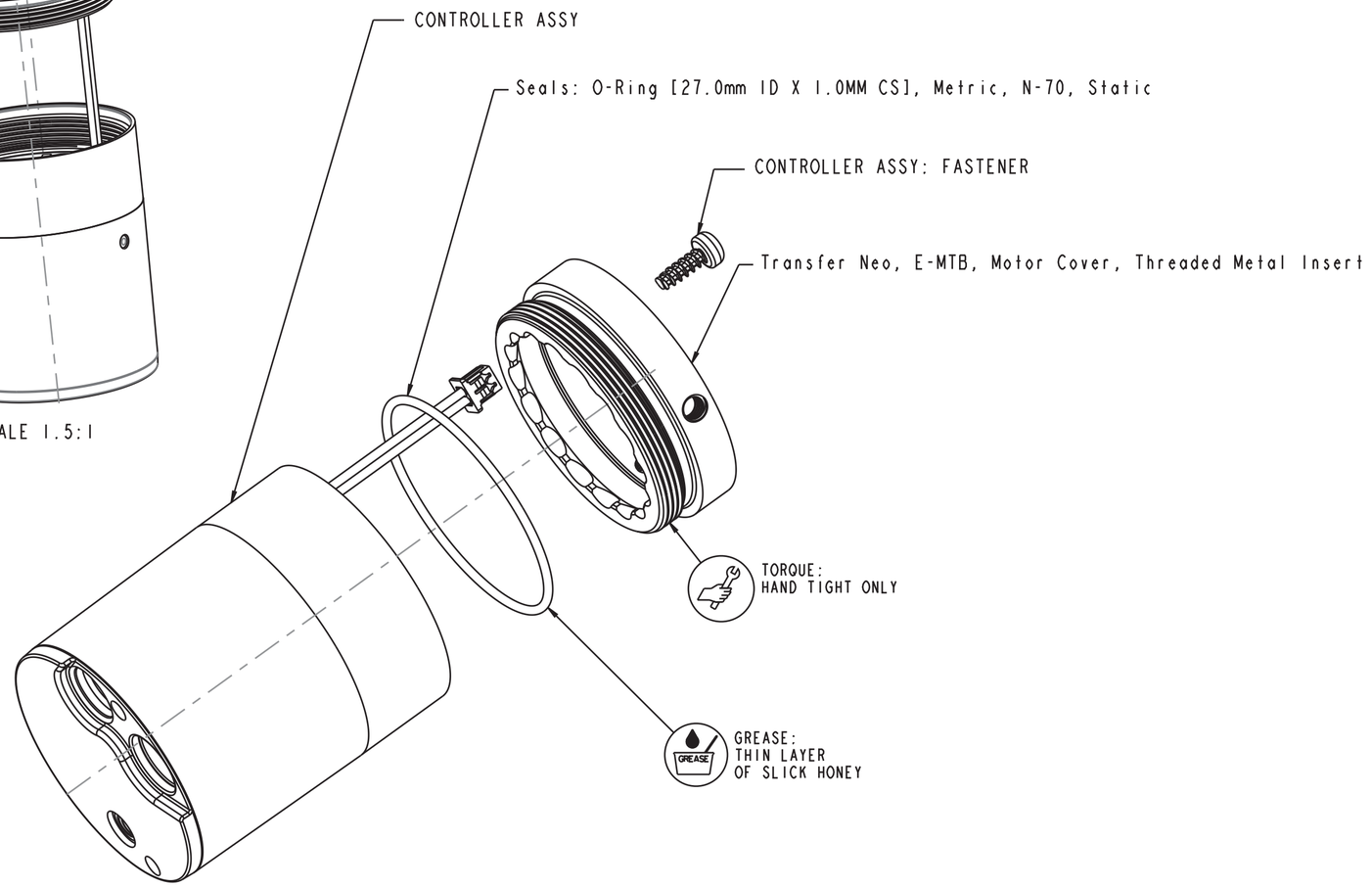

FOX Factory, Inc.
2055 Sugarloaf Circle, Suite 300
Duluth, Ga 30097 USA Phone 800-369-7469

TITLE
Assy Dwg, Transfer Neo, E-Opt, Motor Cover

SIZE	DWG. NO.	REV
C		

PLOT SCALE: 2:1 | SHEET: 1 OF 1